HSF

NOTES:
Rated Current: 0.4AMP
Contact Resistance: 20mΩ max
Withstand Voltage: 200V AC/DC
Insulation Resistance: 500MΩ min
Operation Temperature: −25℃ to +85℃

Terminal: Phosphor Bronze Tin−plated
Fatting Nail: Brass Tin−plated
Housing: Thermoplastic UL94V−0
Slider: Thermoplastic UL94V−0

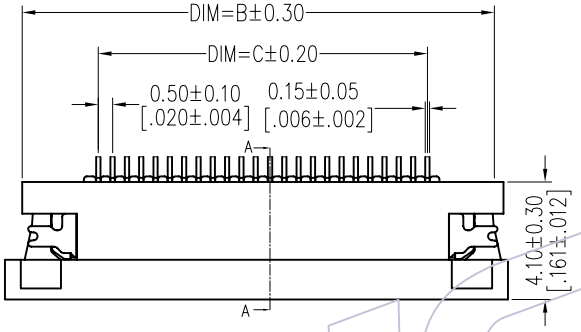

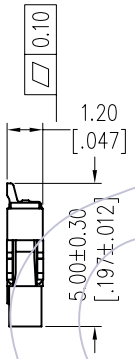

Recommended P.C.B Layout(Top Side)
(PCB BOARD TOLERANCE±0.05)

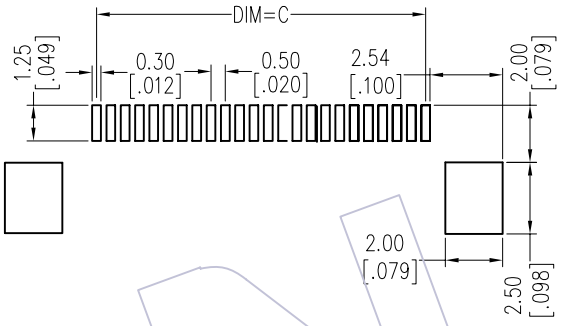

Ordering Information

5142- XX R Z U W W X 01

- XX: No.of Pins 04~60P
- U: Contact Type U=Up contact
- W: Color A=Brown B=Black W=White E=Beige
- X: Packing T=Tube R=Reel

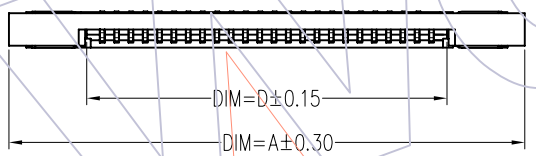

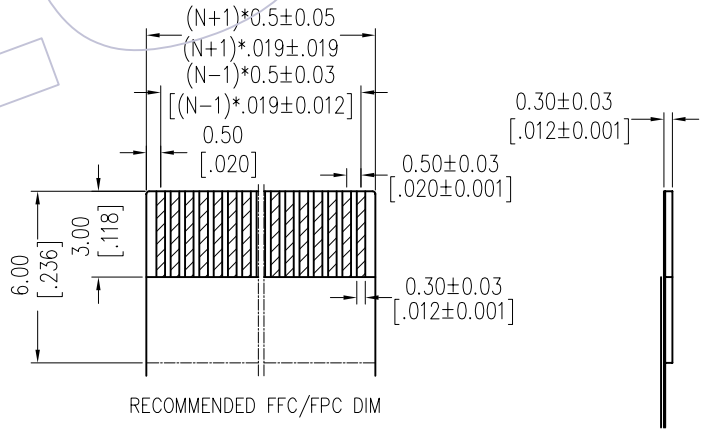

RECOMMENDED FFC/FPC DIM

PIN	DIM=A	DIM=B	DIM=C	DIM=D
60P	36.0	34.8	29.50	30.60
59P	35.5	34.3	29.00	30.10
58P	35.0	33.8	28.50	29.60
57P	34.5	33.3	28.00	29.10
56P	34.0	32.8	27.50	28.60
55P	33.5	32.3	27.00	28.10
54P	33.0	31.8	26.50	27.60
53P	32.5	31.3	26.00	27.10
52P	32.0	30.8	25.50	26.60
51P	31.5	30.3	25.00	26.10
50P	31.0	29.8	24.50	25.60
49P	30.5	29.3	24.00	25.10
48P	30.0	28.8	23.50	24.60
47P	29.5	28.3	23.00	24.10
46P	29.0	27.8	22.50	23.60
45P	28.5	27.3	22.00	23.10
44P	28.0	26.8	21.50	22.60
43P	27.5	26.3	21.00	22.10
42P	27.0	25.8	20.50	21.60
41P	26.5	25.3	20.00	21.10
40P	26.0	24.8	19.50	20.60
39P	25.5	24.3	19.00	20.10
38P	25.0	23.8	18.50	19.60
37P	24.5	23.3	18.00	19.10
36P	24.0	22.8	17.50	18.60
35P	23.5	22.3	17.00	18.10
34P	23.0	21.8	16.50	17.60
33P	22.5	21.3	16.00	17.10
32P	22.0	20.8	15.50	16.60
31P	21.5	20.3	15.00	16.10
30P	21.0	19.8	14.50	15.60
29P	20.5	19.3	14.00	15.10
28P	20.0	18.8	13.50	14.60
27P	19.5	18.3	13.00	14.10
26P	19.0	17.8	12.50	13.60
25P	18.5	17.3	12.00	13.10
24P	18.0	16.8	11.50	12.60
23P	17.5	16.3	11.00	12.10
22P	17.0	15.8	10.50	11.60
21P	16.5	15.3	10.00	11.10
20P	16.0	14.8	9.50	10.60
19P	15.5	14.3	9.00	10.10
18P	15.0	13.8	8.50	9.60
17P	14.5	13.3	8.00	9.10
16P	14.0	12.8	7.50	8.60
15P	13.5	12.3	7.00	8.10
14P	13.0	11.8	6.50	7.60
13P	12.5	11.3	6.00	7.10
12P	12.0	10.8	5.50	6.60
11P	11.5	10.3	5.00	6.10
10P	11.0	9.8	4.50	5.60
9P	10.5	9.3	4.00	5.10
8P	10.0	8.8	3.50	4.60
7P	9.5	8.3	3.00	4.10
6P	9.0	7.8	2.50	3.60
5P	8.5	7.3	2.00	3.10
4P	8.0	6.8	1.50	2.60

REV	DATE	MODIFICATION DESCRIPTION	CHANGE
A0	12/07/04	NEW	——

OPERATION	
X.X	±0.40
X.XX	±0.25
X.XXX	±0.15
Angle	± 3°
DIM	TOL

DRAW	JYHuang	DATE	2012/07/04
CHECK		DATE	
APPROVE		DATE	

SCALE	FIT
UNIT	mm / inch
SIZE	A4
SHEET	1/1
PROJ.	

PART NO. 5142-XXRZUWXX0X

TITLE: 0.50 FPC 90° SMT UP CONTACT WITH LOCK H=1.2mm

Customer NO.

WCON
Http: www.wcon.com

WCON−Dongguan
Tel: +86 769 85358920
Fax: +86 769 85358915
E−mail: sales@wcon.com

WCON−Kunshan
Tel: +86 512 57468408
Fax: +86 512 57468468
E−mail: salesks@wcon.com